TBI TRANSFORMER BOBBIN INDUSTRIAL CO.,LTD.
Tel : 86-769-88789999 Fax : 86-769-88789989
http:// tbi-tw.com e-mail : tb6688@ms46.hinet.net

REVISIONS				
REV	SYM	DRAFTER	CHECKER	DATE
1		X.H.GU	G.F.YANG	07/15/19
2				
3				

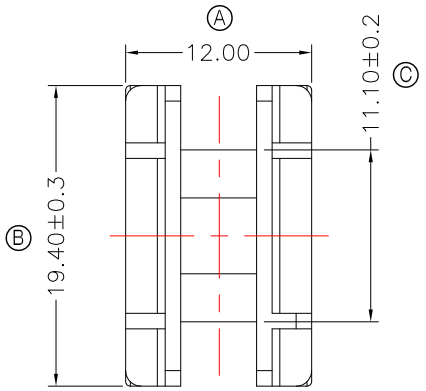

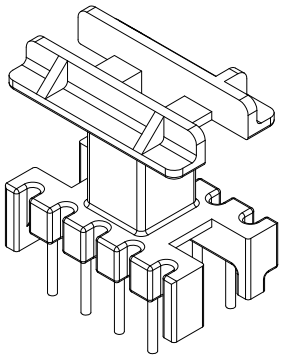

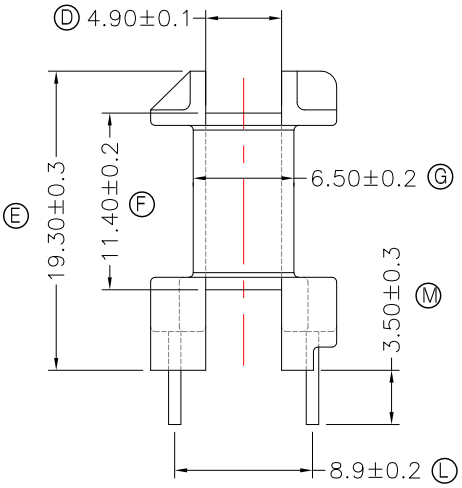

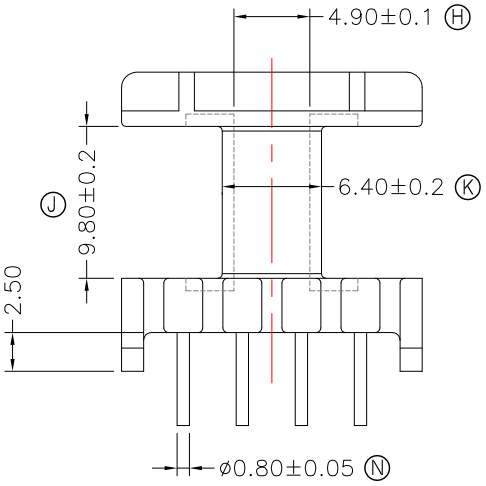

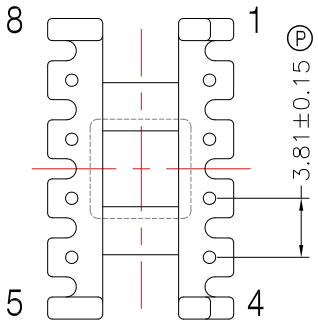

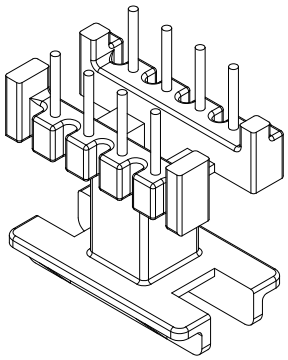

PIN拉力要求 1.0Kg MIN;

DWG NO.	EF16-8P-TH-D9-12				
PART NO.	MATERIAL (BOBBIN)	MATERIAL (TERMINAL)	TERMINAL (PLATING)	PIN ALLOCATION	NOTE
TBI-205-02491.1206	PM-9820	CP WIRE	Sn	ALL PIN	

TOLERANCE:0<L<=4:±0.1 4<L<=16:±0.2 16<L<=63:±0.3 | UNIT : m / m | SCALE 1 : 1

Finish:
1. PB wire Immersion Sn on terminal : Thickness:Sn plating,100,5 μ m (200 μ inches) min,Base nickel 0.625 μ m (25 μ inches) min.
2. CP wire Immersion Sn on terminal : Thickness:Sn plating,100,5 μ m (200 μ inches) min.
3. Coplanarity deviation: 0.10 mm (0.004 inches)max.

REV 1