TBI TRANSFORMER BOBBIN INDUSTRIAL CO.,LTD.
Tel : 86-769-88789999 Fax : 86-769-88789989
http:// tbi-tw.com e-mail : tb6688@ms46.hinet.net

REVISIONS				
REV	SYM	DRAFTER	CHECKER	DATE
1		X.H.GU	G.F.YANG	11/17/11
2		X.H.GU	G.F.YANG	05/15/12
3				

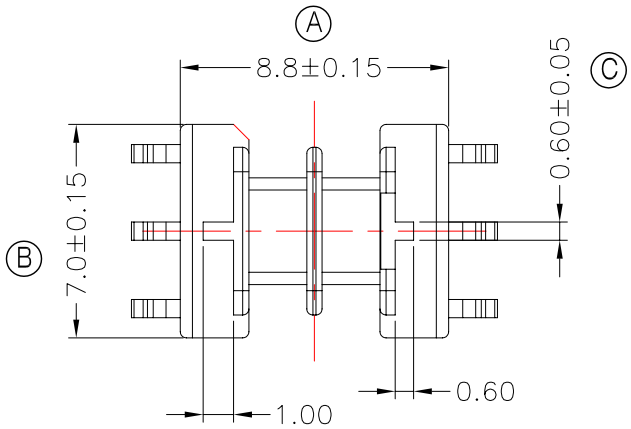

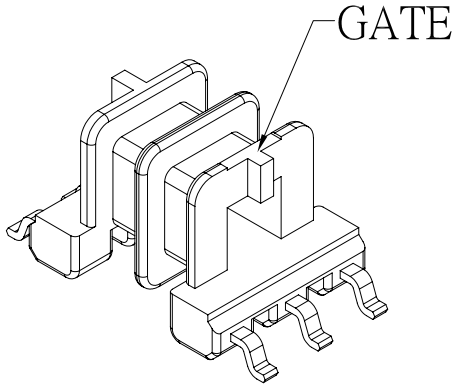

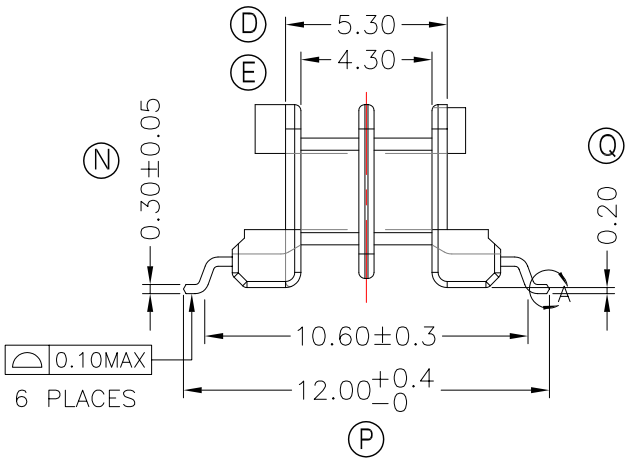

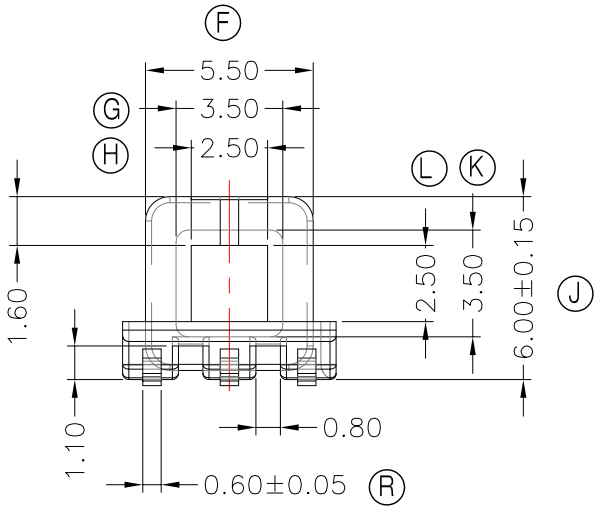

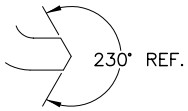

DETAIL:A
PATENTED

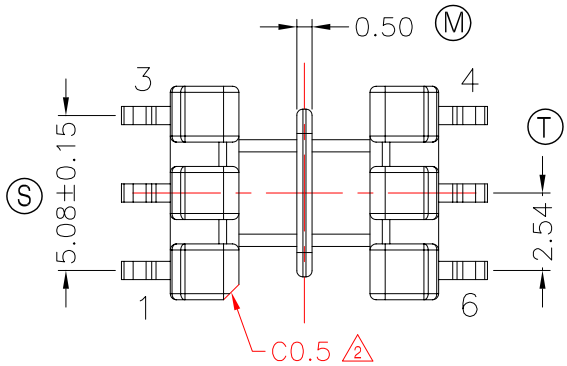

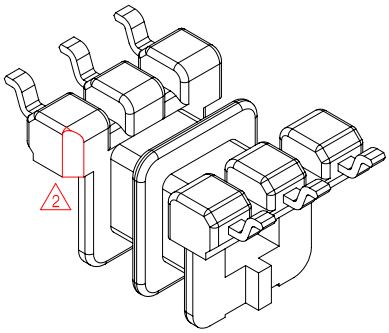

Note : 拉力要求 1.0Kg MIN

DWG NO.	EE8.0-6P-GW-2.54-2A-11-2S					
PART NO.	MATERIAL (BOBBIN)	MATERIAL (TERMINAL)	TERMINAL (PLATING)	PIN ALLOCATION	NOTE	
TBI-101-03212.1103	PM-9630(BK)	PB	Sn	ALL PIN		S.C
						H.C

TOLERANCE: .X±0.15 .XX±0.10 .XXX±0.05 UNIT : m / m SCALE 1 : 1

Finish: 1. PB wire Immersion Sn on terminal : Thickness:Sn plating,100,5-12.5 μm (200-500 μinches) min,Base nickel 1.25-2.5 μm (50-100 μ inches) min.
2. CP wire Immersion Sn on terminal : Thickness:Sn plating,100,5-12.5 μm (200-500 μinches) min.
3. Coplanarity deviation: 0.10 mm (0.004 inches)max.

REV 2