TBI TRANSFORMER BOBBIN INDUSTRIAL CO.,LTD.
Tel : 86-769-88789999 Fax : 86-769-88789989
http:// tbi-tw.com e-mail : tb6688@ms46.hinet.net

REVISIONS				
REV	SYM	DRAFTER	CHECKER	DATE
1		Y.G.HSU	W.H.HSU	05/12/07
2		YAN.TANG	W.H.HSU	06/11/07
3		X.H.GU	G.F.YANG	09/05/17

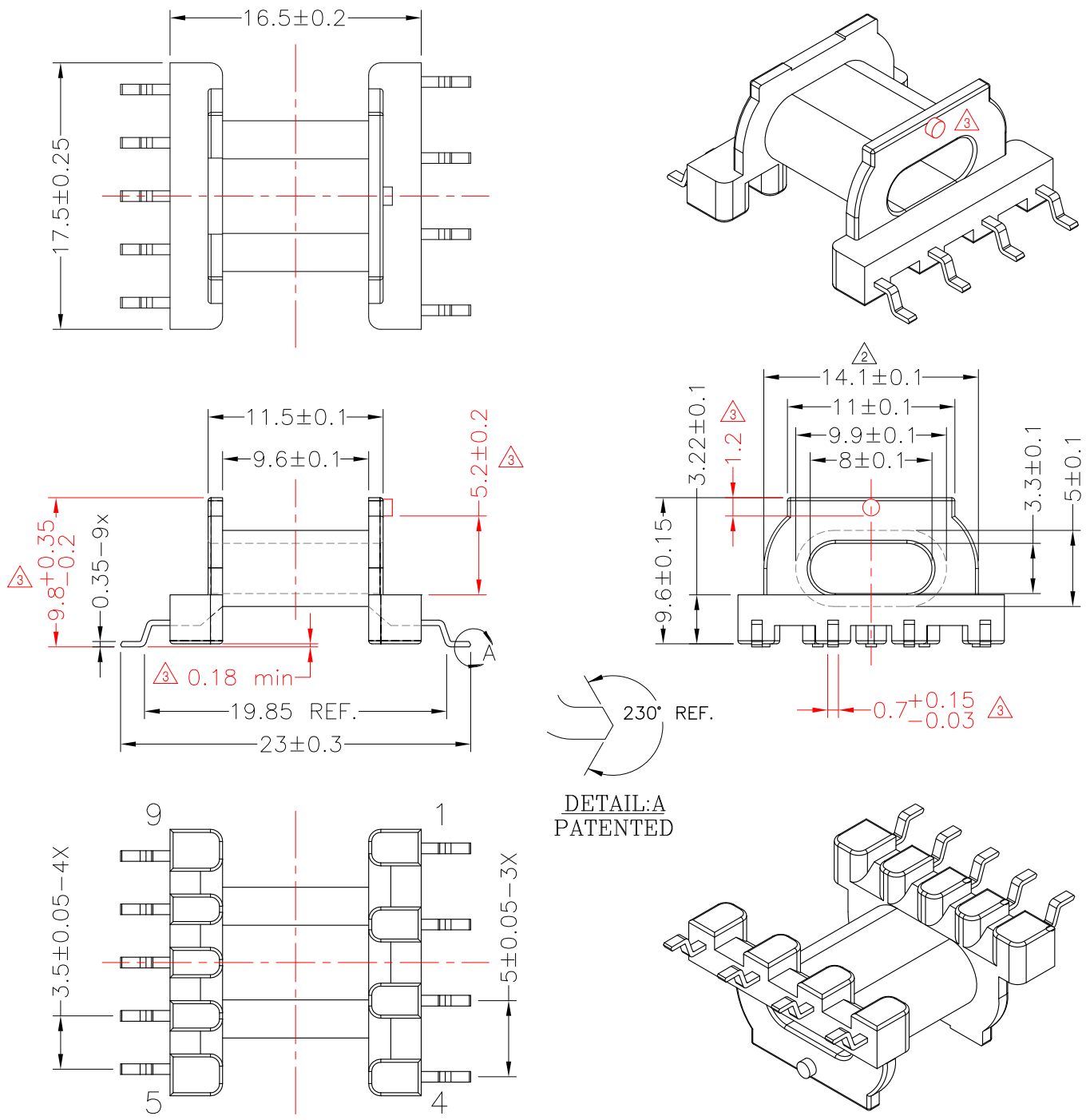

DWG NO.	EPC17-9P-GW-5.0-0B-1					
PART NO.	MATERIAL (BOBBIN)	MATERIAL (TERMINAL)	TERMINAL (PLATING)	PIN ALLOCATION	NOTE	
TBI-106-01021.103	PM-9630	P.B C5191	Sn	ALL PIN		S.C
						H

TOLERANCE: .X±0.15 .XX±0.10 .XXX±0.05 | UNIT : m / m | SCALE 2.5 : 1

Finish:
1. Pb wire Immersion Sn on terminal : Thickness:Sn plating,100,5 μ m (200 μ inches) min,Base nickel 0.625 μ m (25 μ inches) min.
2. CP wire Immersion Sn on terminal : Thickness:Sn plating,100,5 μ m (200 μ inches) min.
3. Coplanarity deviation: 0.10 mm (0.004 inches)max.

REV 3