TBI TRANSFORMER BOBBIN INDUSTRIAL CO.,LTD.
Tel : 86-769-88789999 Fax : 86-769-88789989
http:// tbi-tw.com e-mail : tb6688@ms46.hinet.net

REVISIONS

REV	SYM	DRAFTER	CHECKER	DATE
1		X.H.GU	W.H.HSU	08/10/07
2				
3				

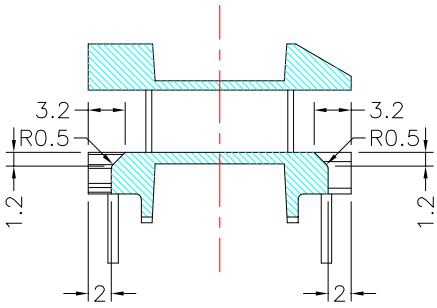

Section A-A

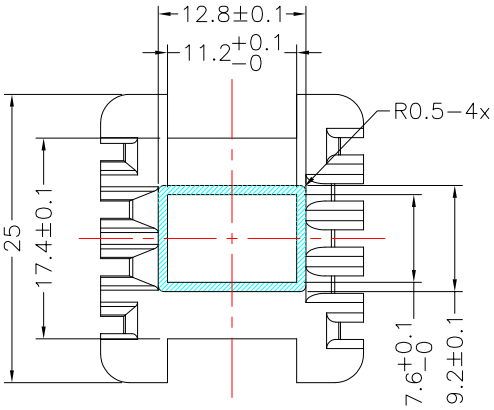

Section B-B

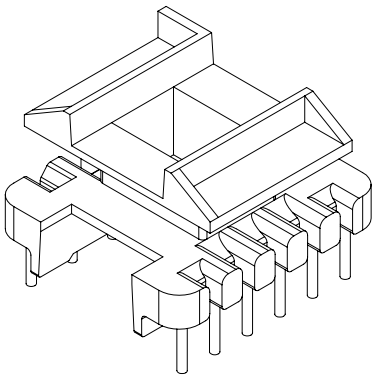

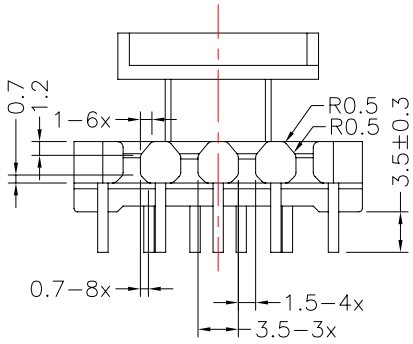

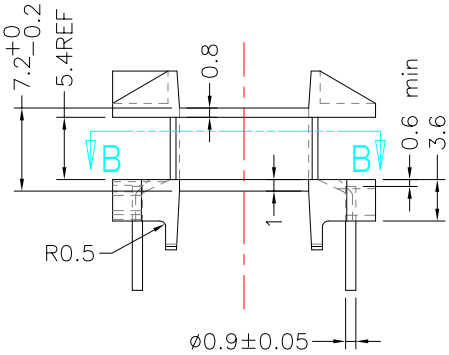

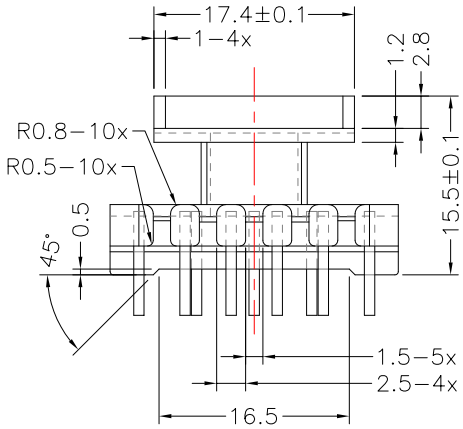

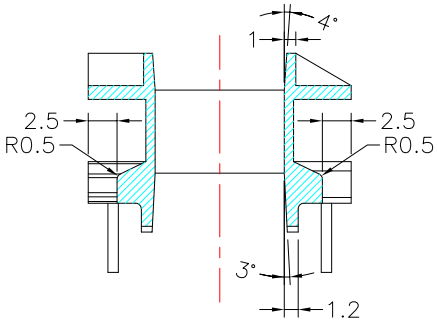

Section C-C

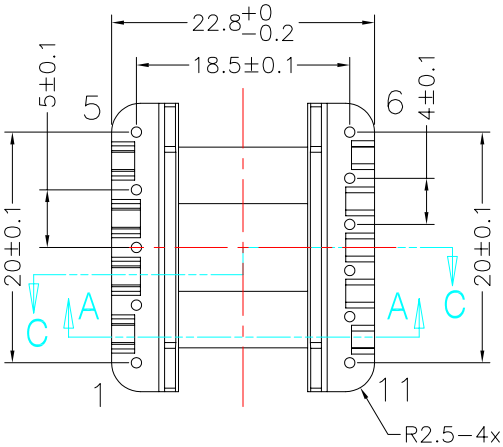

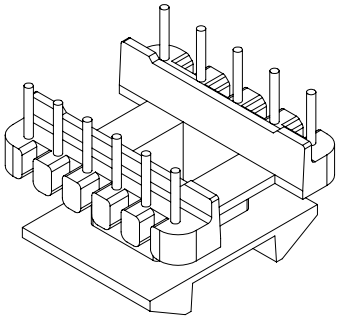

NOTES:
1.Pin material: CP WIRE,
Coating material: Sn100(pb<0.1wt%)5um~10um
2.Unless otherwise specified,
All radius are R0.2~0.3mm.
3.Pull-out force per pin 1.5Kg,time:10s Min
After soldering(temperature:420±10°C,time1~2s)

DWG NO.	EF25-11P-TH-D-1					
PART NO.	MATERIAL (BOBBIN)	MATERIAL (TERMINAL)	TERMINAL (PLATING)	PIN ALLOCATION	NOTE	
TBI-205-05041.106	PM-9630	C.P WIRE	Sn	ALL PIN		S.C
						H.C
	TOLERANCE: 0<L<=4:±0.1 4<L<=16:±0.2 16<L<=163:±0.3			UNIT : m / m	SCALE 1.5 : 1	

Finish: 1. PB wire Immersion Sn on terminal : Thickness:Sn plating,100,5 μm (200 μinches) min,Base nickel 0.625 μm (25 μ inches) min.
2. CP wire Immersion Sn on terminal : Thickness:Sn plating,100,5 μm (200 μinches) min.
3. Coplanarity deviation: 0.10 mm (0.004 inches)max.

REV 1