TBI TRANSFORMER BOBBIN INDUSTRIAL CO.,LTD.
Tel : 86-769-88789999 Fax : 86-769-88789989
http:// tbi-tw.com e-mail : tb6688@ms46.hinet.net

REVISIONS				
REV	SYM	DRAFTER	CHECKER	DATE
1		X.X.YUAN	G.F.YANG	01/20/14
2				
3				

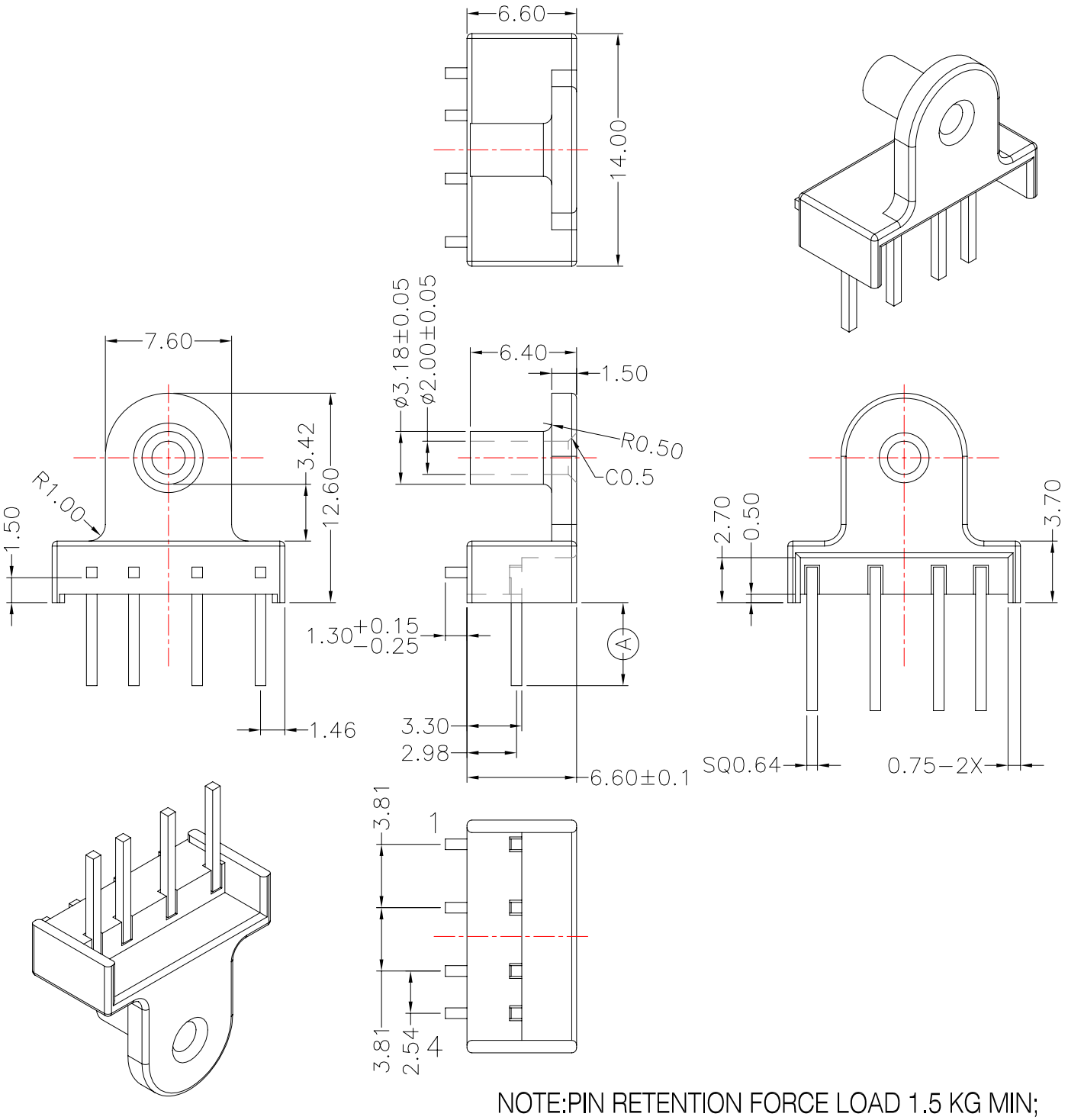

NOTE:PIN RETENTION FORCE LOAD 1.5 KG MIN;

DWG NO.	B1314-4P-THL-C-12					
PART NO.	MATERIAL (BOBBIN)	MATERIAL (TERMINAL)	TERMINAL (PLATING)	PIN ALLOCATION	NOTE	
TBI-220-22031.1206	PM-9820	CP WIRE	Sn	ALL PIN Ⓐ =5.0±0.2		S.C
TBI-220-22031.1216	PM-9820	CP WIRE	Sn	ALL PIN Ⓐ =3.5±0.2		H.C

TOLERANCE: 0<L<=8 ±0.1 8<L<=16 ±0.2 16<L<70 ±0.3 ANGLES :±1°

SCALE 1 : 1

Finish:
1. PB wire Immersion Sn on terminal : Thickness:Sn plating,100%,5 μm (200 μ inches) min,Base nickel 0.625 μm (25 μ inches) min.
2. CP wire Immersion Sn on terminal : Thickness:Sn plating,100%,5 μm (200 μ inches) min.
3. Coplanarity deviation: 0.10 mm (0.004 inches)max.

REV 1