TBI TRANSFORMER BOBBIN INDUSTRIAL CO.,LTD.
Tel : 86-769-88789999 Fax : 86-769-88789989
http:// tbi-tw.com e-mail : tb6688@ms46.hinet.net

REVISIONS

REV	SYM	DRAFTER	CHECKER	DATE
1		H.X.DUAN	G.F.YANG	07/14/11
2		X.H.GU	G.F.YANG	12/27/11
3				

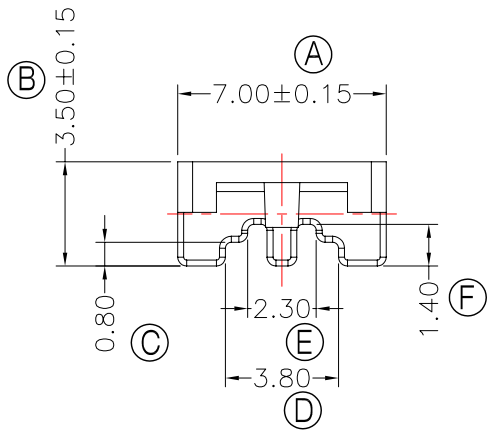

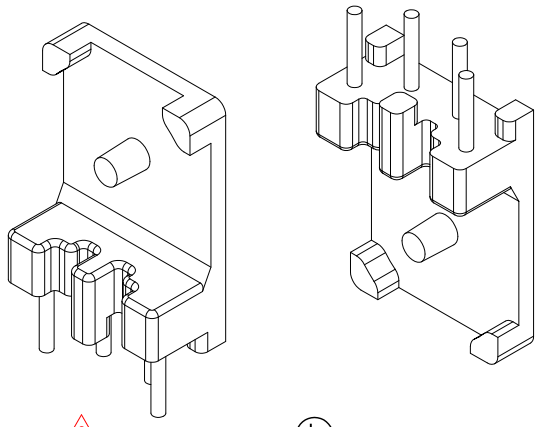

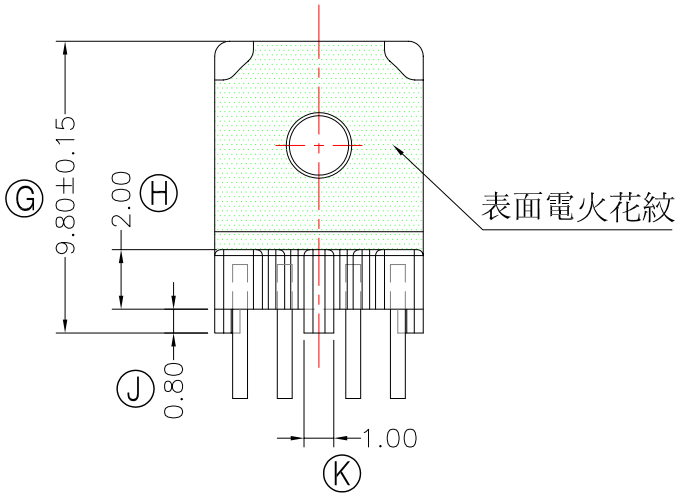

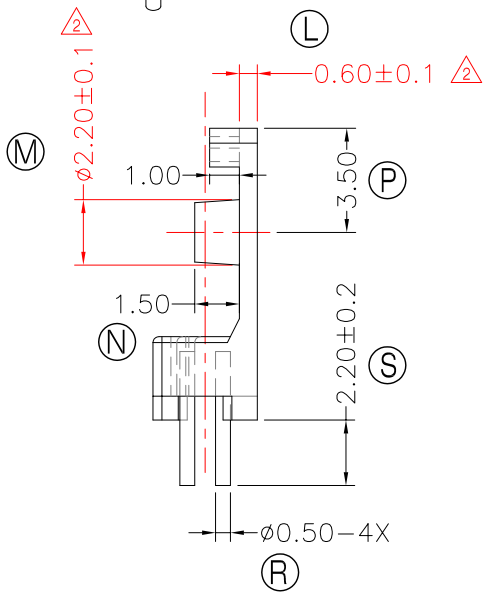

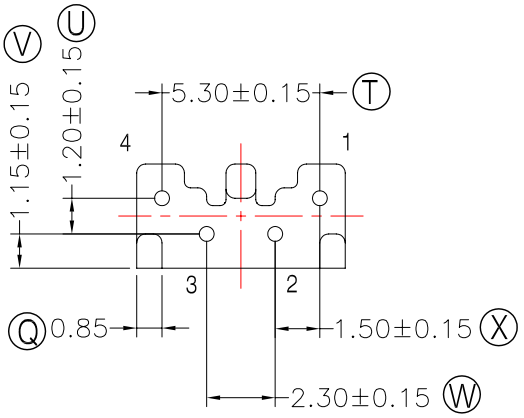

Note:
1.Aging condition:Baking 16 hours at 155˚C degree in oven,the surface area of pin is more than 95% after soldering(Besides the section of pin)
烘烤條件:16 小時155˚C
PIN吃錫面積達到95%以上.
2.pin pulling force>1.5Kg after soldering.
3.切斷面經過老化以後不保證有上錫.
4.PIN 切斷面上錫50%以上! 不做老化,用245±5˚焊錫1~3S

DWG NO.	B10X7-4P-TH-A2-11					
PART NO.	MATERIAL (BOBBIN)	MATERIAL (TERMINAL)	TERMINAL (PLATING)	PIN ALLOCATION	NOTE	
TBI-220-22121.1106	PM-9630JT	CP Wire	Sn	ALL PIN		S.C
						H.C
	TOLERANCE:0<L<=4:±0.1 4<L<=16:±0.2 16<L<=63:±0.3 pin pitch:±0.2			UNIT : m / m	SCALE	1 :1

Finish: 1. PB wire Immersion Sn on terminal : Thickness:Sn plating,100,5 μm (200 μinches) min,Base nickel 0.625 μm (25 μ inches) min.
2. CP wire Immersion Sn on terminal : Thickness:Sn plating,100,5 μm (200 μinches) min.
3. Coplanarity deviation: 0.10 mm (0.004 inches)max.

REV 2