TBI TRANSFORMER BOBBIN INDUSTRIAL CO.,LTD.
Tel : 86-769-88789999 Fax : 86-769-88789989
http:// tbi-tw.com e-mail : tb6688@ms46.hinet.net

REVISIONS				
REV	SYM	DRAFTER	CHECKER	DATE
1		M.WANG	G.F.YANG	09/01/16
2				
3				

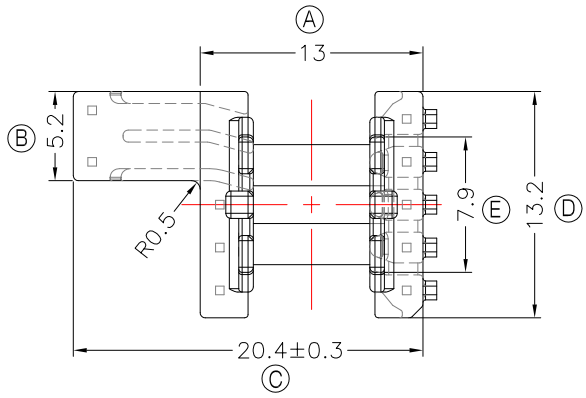

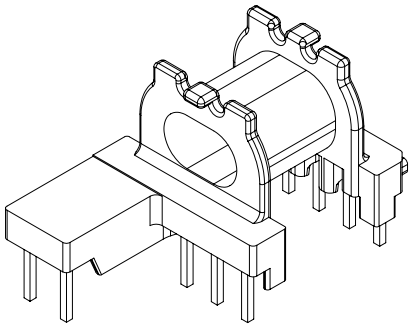

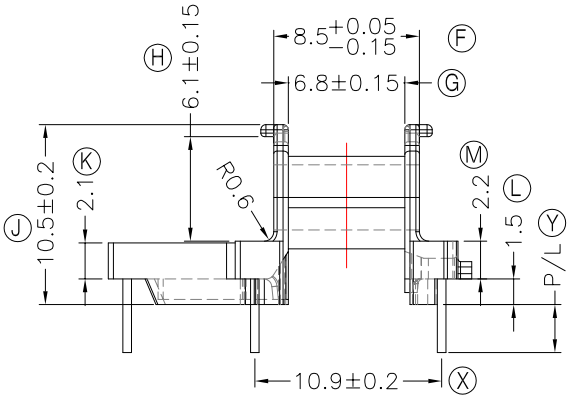

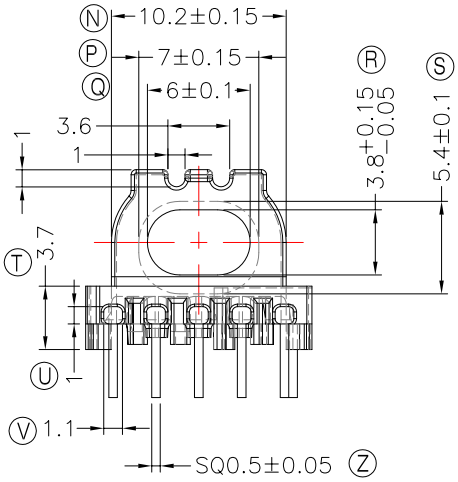

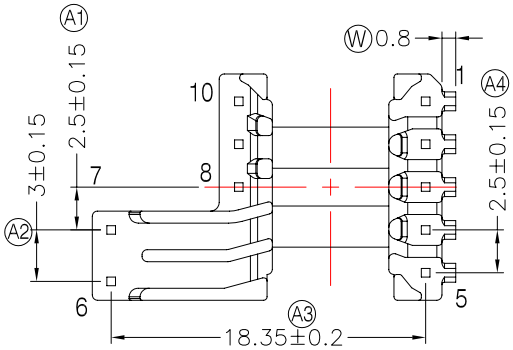

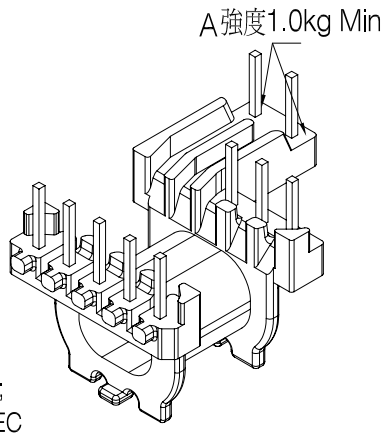

NOTE:
1.耐壓4.0Kv /1.5mA 60S;
2.焊錫溫度:450°±10° 3SEC
3.焊錫前拉力:1.0kg Min,焊錫後拉力:1.5kg Min;
4.任意一點強度須1.8kg Min;(除以下測試點.A.處爲1.0kg Min).

DWG NO.	EPC13-13C-10P-TH-B0-11					
PART NO.	MATERIAL (BOBBIN)	MATERIAL (TERMINAL)	TERMINAL (PLATING)	PIN ALLOCATION	NOTE	
TBI-206-04201.1106	PM-9630	CP WIRE	Sn	ALL PIN P/L=2.8±0.2		S
TBI-206-04201.1116	PM-9630	CP WIRE	Sn	CUT PIN#3,8,9,10 P/L=2.8±0.2		H
TBI-206-04201.1126	PM-9630	CP WIRE	Sn	CUT PIN#3,8 P/L=2.8±0.2		
TBI-206-04201.1136	PM-9630	CP WIRE	Sn	CUT PIN#3,8 P/L=2.5±0.2		

TOLERANCE: 0<L<=4:±0.1 4<L<=16:±0.2 16<L<=63:±0.3 | UNIT : m / m | SCALE 1 : 1

Finish:
1. PB wire Immersion Sn on terminal : Thickness:Sn plating,100%,5μm (200μinches) min,Base nickel 0.625μm (25μ inches) min.
2. CP wire Immersion Sn on terminal : Thickness:Sn plating,100%,5μm (200μinches) min.
3. Coplanarity deviation: 0.10 mm (0.004 inches)max.

REV 1